RD104 Dana 30,30 SPL,3.73 & UP

PARTS LIST

ITEM #	QTY	DESCRIPTION	PART #	NOTES
1	1	SEAL HOUSING O-RINGS (PK OF 2)	160235SP	1
2	1	SEAL HOUSING KIT	081801SP	
3	2	SHIM KIT	SHK003	
*	2	MASTER SHIM	150325	
4	1	BONDED SEAL	160701SP	
5	1	CLUTCH GEAR & WAVESPRING KIT	050903SP	
6	1	SPIDER BLOCK	070503SP	
7	1	LONG CROSS SHAFT	061302SP	
8	1	SIDE GEAR	SEE NOTE	3
9	1	COUNTERSUNK SCREW (PK OF 2)	200213SP	
10	3	RETAINING PIN SET (PK OF 4)	120601SP	
11	2	TAPERED ROLLER BEARING	160109	2
12	1	FLANGE CAP KIT	028502SP	
13	1	WAVESPRING	150702SP	
14	1	SPLINED SIDE GEAR	SEE NOTE	3
15	2	SHORT CROSS SHAFT	061402SP	
16	4	PINION GEAR	SEE NOTE	3
17	4	PINION THRUST WASHER	SEE NOTE	4
18	2	SIDE GEAR THRUST WASHER	SEE NOTE	4
19	1	DIFFERENTIAL CASE	013102SP	
*	1	BULKHEAD FITTING KIT (O-RING TYPE)	170111	
*	1	PUSH-IN FITTING (5mm to 1/8"BSPP)	170201SP	
*	1	AIR LINE (5mm DIA X 6m LONG)	170301SP	
*	1	SOLENOID VALVE (12V)	180103	
*	1	SWITCH	180209SP	
*	1	SWITCH COVER (FRONT)	180210SP	
*	1	CABLE TIE (PK OF 25)	180305	
*	1	OPERATING & SERVICE MANUAL	210200	
*	1	INSTALLATION GUIDE	2102104	

* *Not illustrated in exploded view*

NOTES

1 For replacement O-rings use only BS133 Viton 75.
2 For replacement bearing use Timken part # LM102949 / LM102910.
3 Available only as complete 6 gear set # 728J031
4 Available only as complete thrust washer kit #730J01
- Bearing cap torque does not apply to aluminium housings. Refer to vehicle's service manual for correct torque value.
- 30 spline Dana 30 is a performance upgrade requiring aftermarket axle shafts.

RD104 Dana 30,30 SPL,3.73 & UP

EXPLODED DIAGRAM

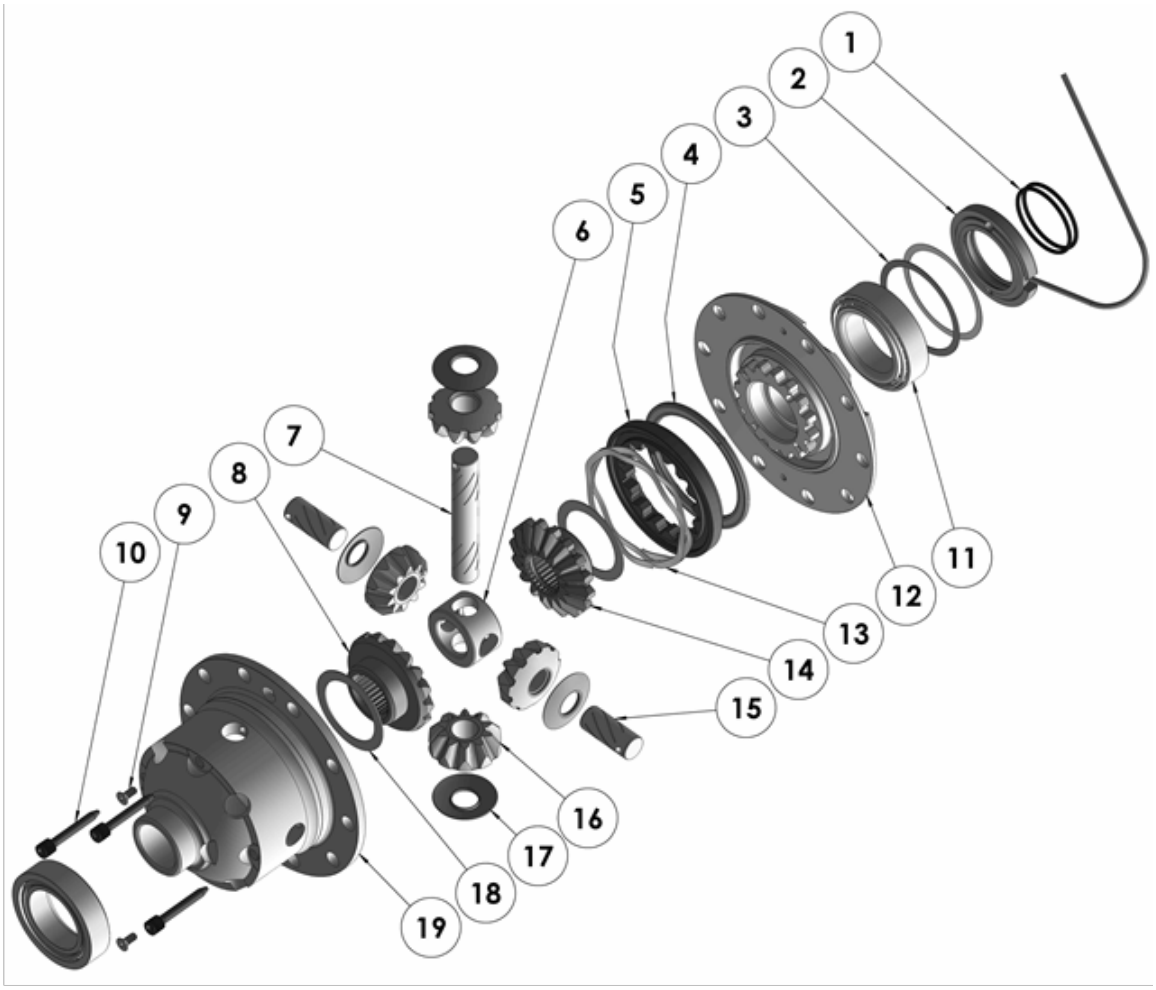

SPECIFICATIONS

Axle Spline	**30 tooth, Ø33.3mm [1.31”]**
Ratio Supported	**3.73:1 & up**
Ring Gear ID	**114.3mm [4.50”]**
Ring Gear OD	**183mm [7.2”]**
Ring Gear Bolts	**10 bolts on Ø133mm [5.25”]**
Ring Gear Torque	**75Nm [55 ft-lb]**
Backlash	**0.15-0.25mm [0.006-0.010”]**
Bearing Cap Torque	**81Nm [60 ft-lb] (see note 3)**

ARB Corporation Ltd ▪ 42-44 Garden St Kilsyth VIC 3137 Australia
ARB 4X4 Accessories USA ▪ 720 SW 34th St Renton WA 98057 USA
Australia & International Customer Service ▪ +61 3 9761 6622
North America Customer Service ▪ Toll Free 866 293 9078
www.arb.com.au ***(AUS & Int)*** www.arbusa.com ***(N. America)***